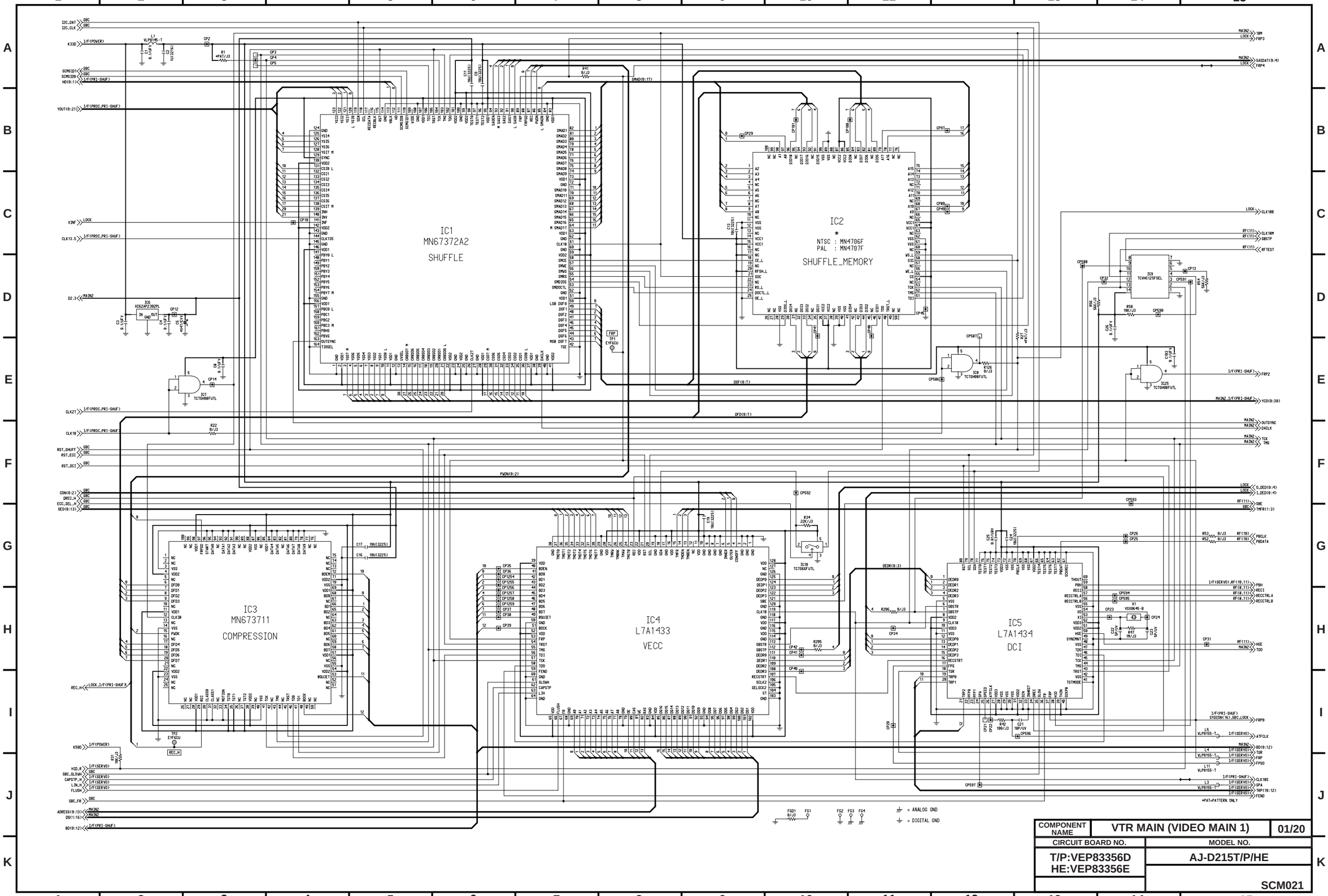

COMPONENT NAME	VTR MAIN (VIDEO MAIN 1)	01/20
CIRCUIT BOARD NO.	MODEL NO.	
T/P:VEP83356D HE:VEP83356E	AJ-D215T/P/HE	
		SCM021

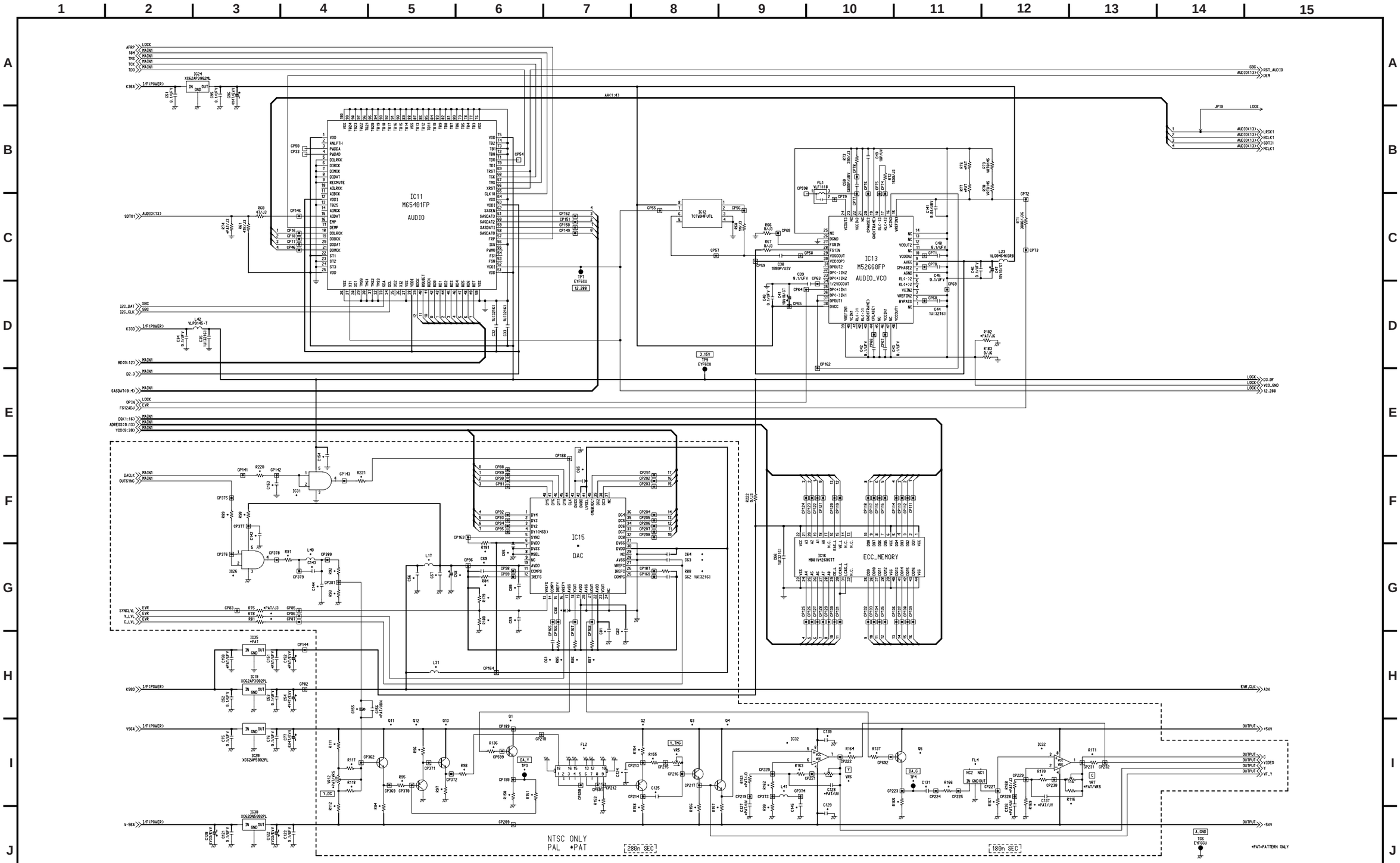

COMPONENT NAME	VTR MAIN(VIDEO MAIN 2)	02/20
CIRCUIT BOARD NO.	MODEL NO.	
T/P:VEP83356D HE:VEP83356E	AJ-D215T/P/HE	
	SCM022	

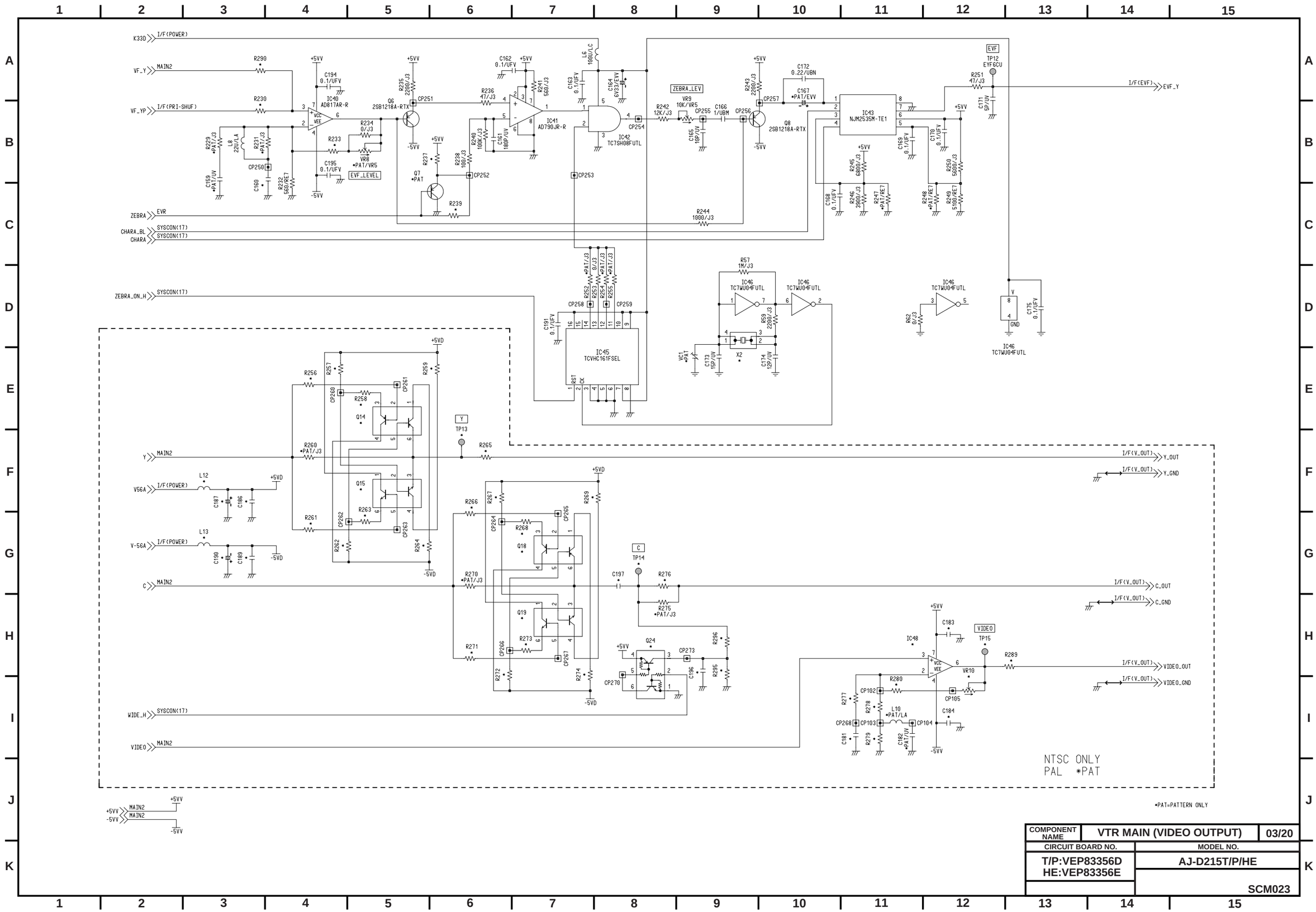

COMPONENT NAME	VTR MAIN (VIDEO OUTPUT)	03/20
CIRCUIT BOARD NO.	MODEL NO.	
T/P:VEP83356D HE:VEP83356E	AJ-D215T/P/HE	
	SCM023	

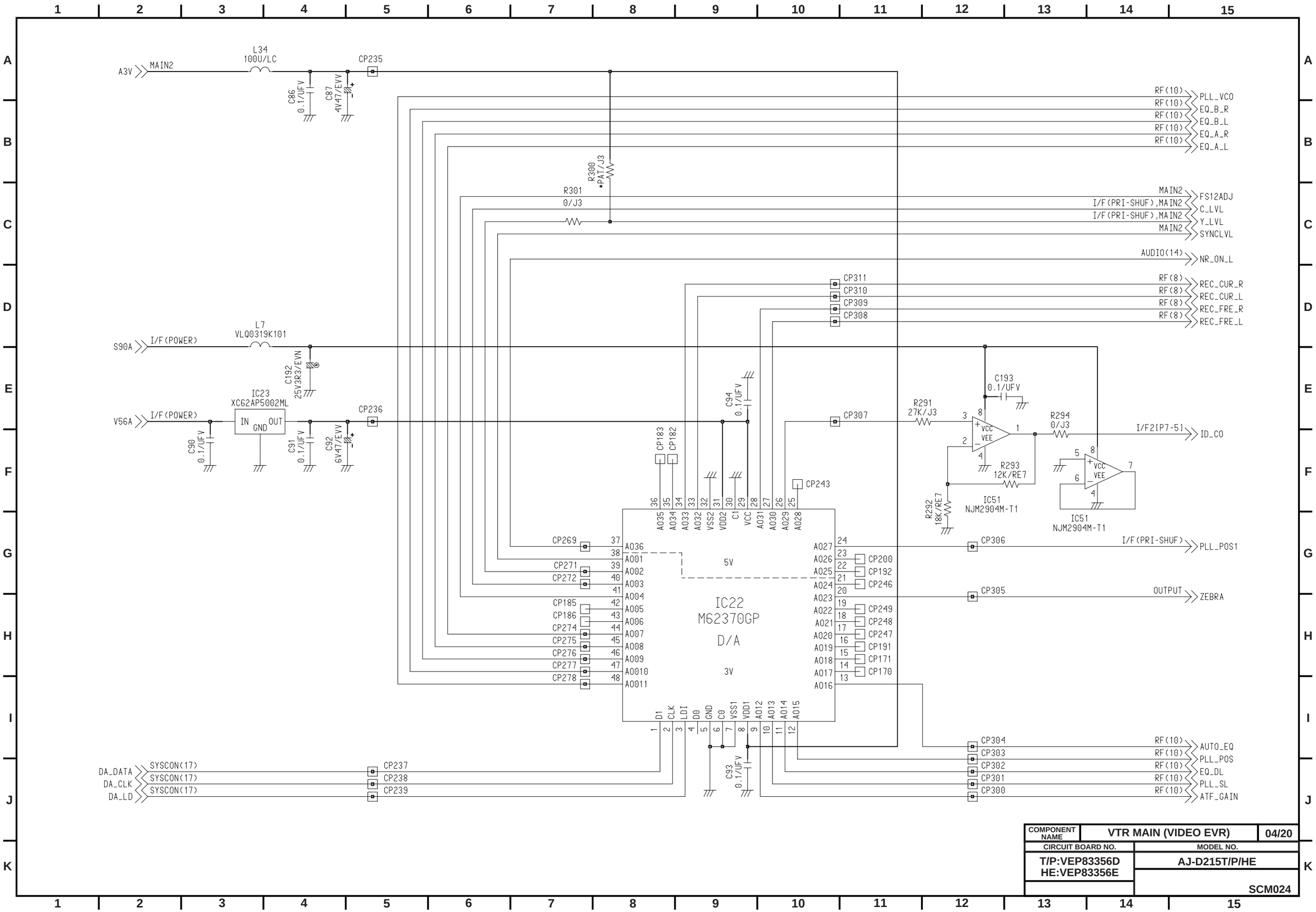

COMPONENT NAME	VTR MAIN (VIDEO EVR)	04/20
CIRCUIT BOARD NO.	MODEL NO.	
T/P:VEP83356D HE:VEP83356E	AJ-D215T/P/HE	
	SCM024	

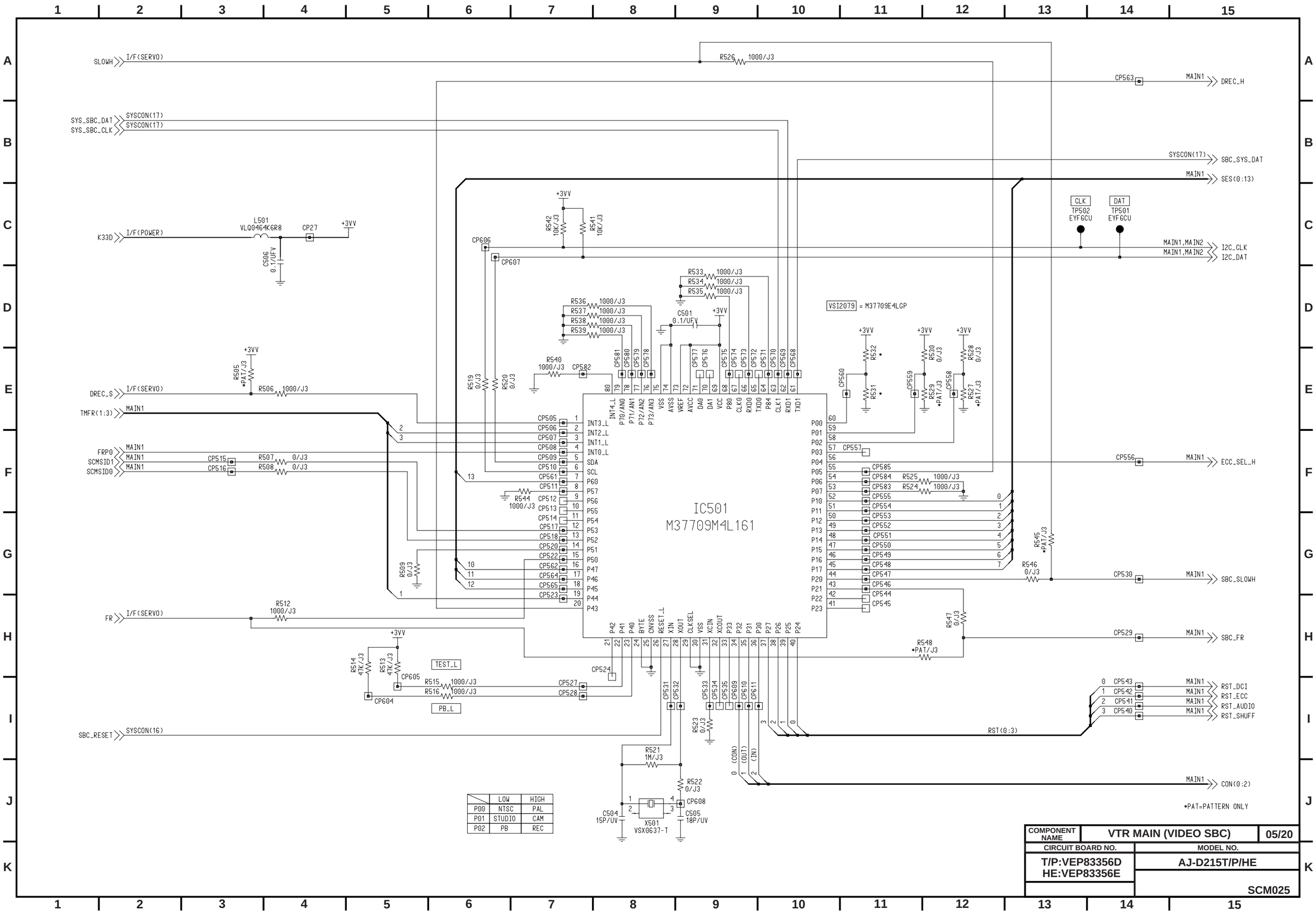

	LOW	HIGH
P00	NTSC	PAL
P01	STUDIO	CAM
P02	PB	REC

COMPONENT NAME	VTR MAIN (VIDEO SBC)	05/20
CIRCUIT BOARD NO.	MODEL NO.	
T/P:VEP83356D HE:VEP83356E	AJ-D215T/P/HE	
	SCM025	

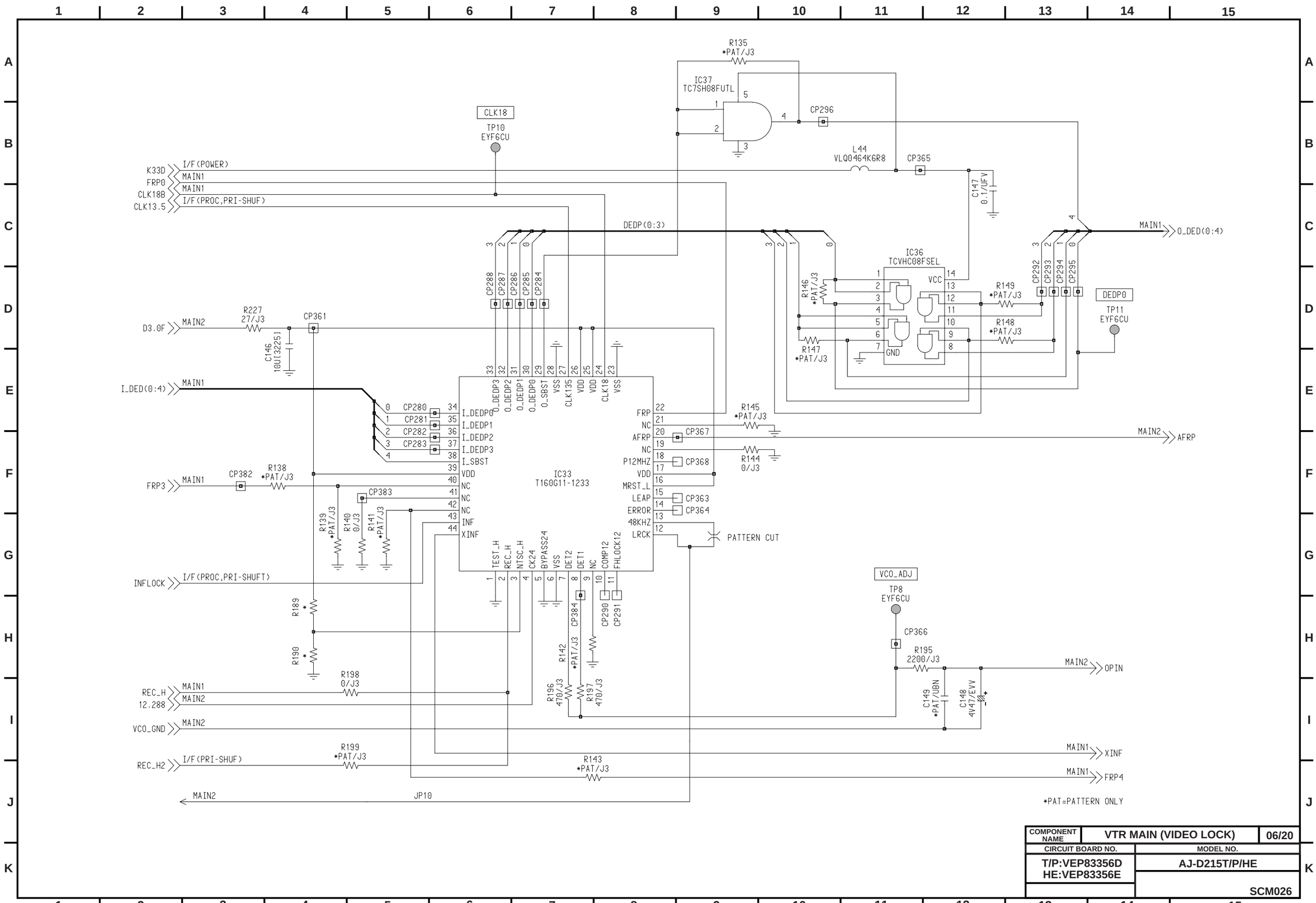

COMPONENT NAME	VTR MAIN (VIDEO LOCK)	06/20
CIRCUIT BOARD NO.	MODEL NO.	
T/P:VEP83356D HE:VEP83356E	AJ-D215T/P/HE	
	SCM026	

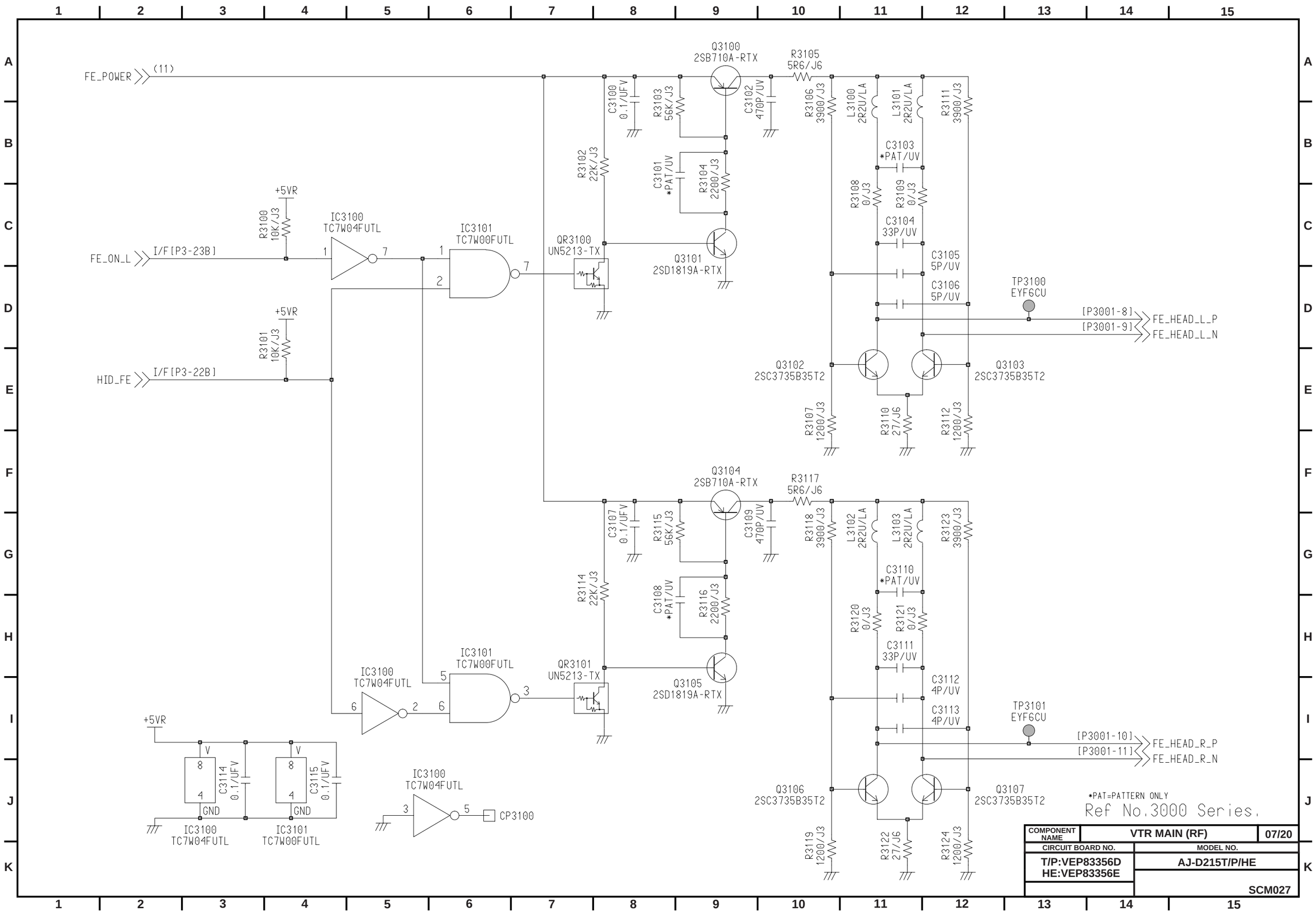

COMPONENT NAME	VTR MAIN (RF)	07/20
CIRCUIT BOARD NO.	MODEL NO.	
T/P:VEP83356D HE:VEP83356E	AJ-D215T/P/HE	
	SCM027	

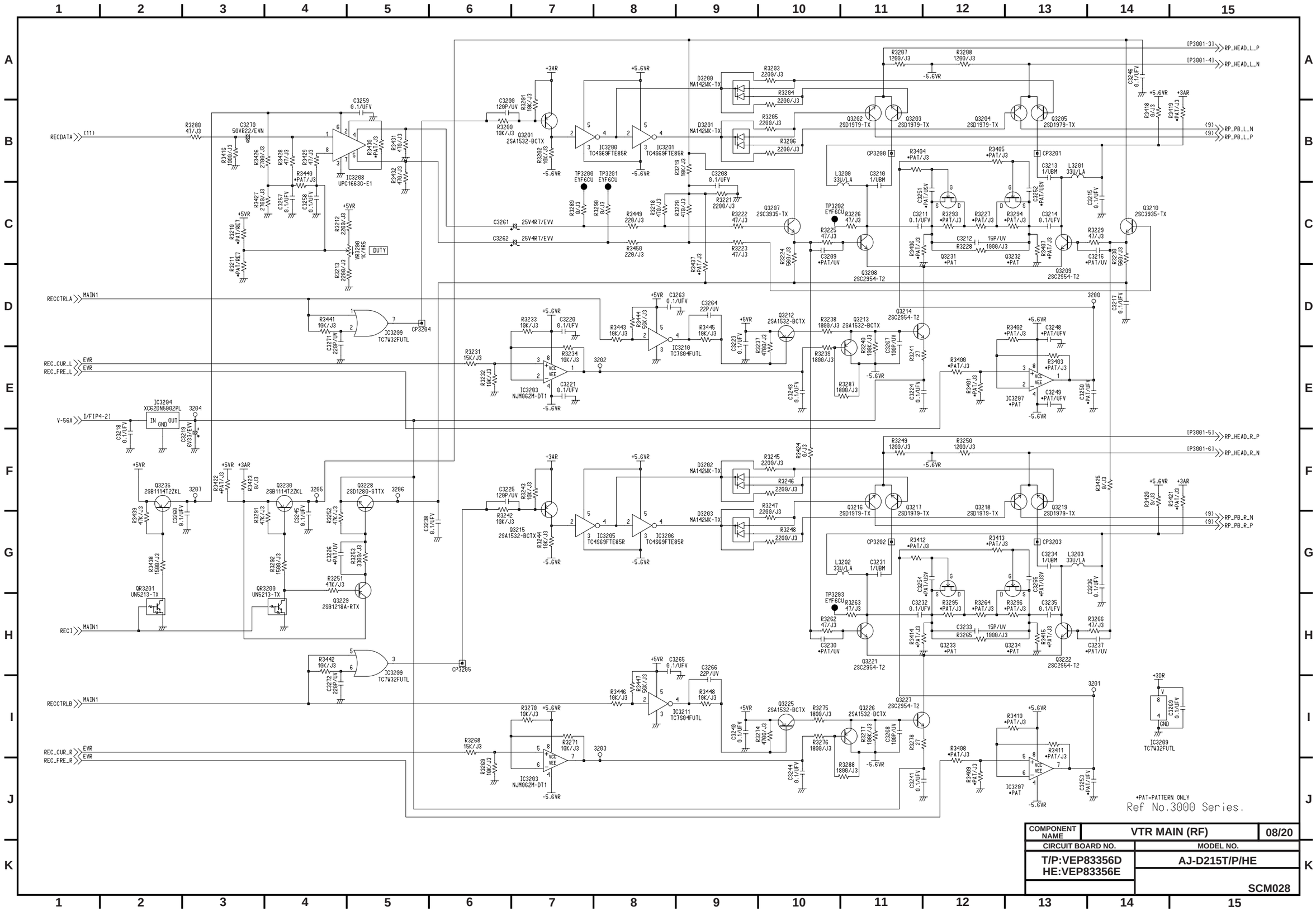

COMPONENT NAME	VTR MAIN (RF)	08/20
CIRCUIT BOARD NO.	MODEL NO.	
T/P:VEP83356D HE:VEP83356E	AJ-D215T/P/HE	
	SCM028	

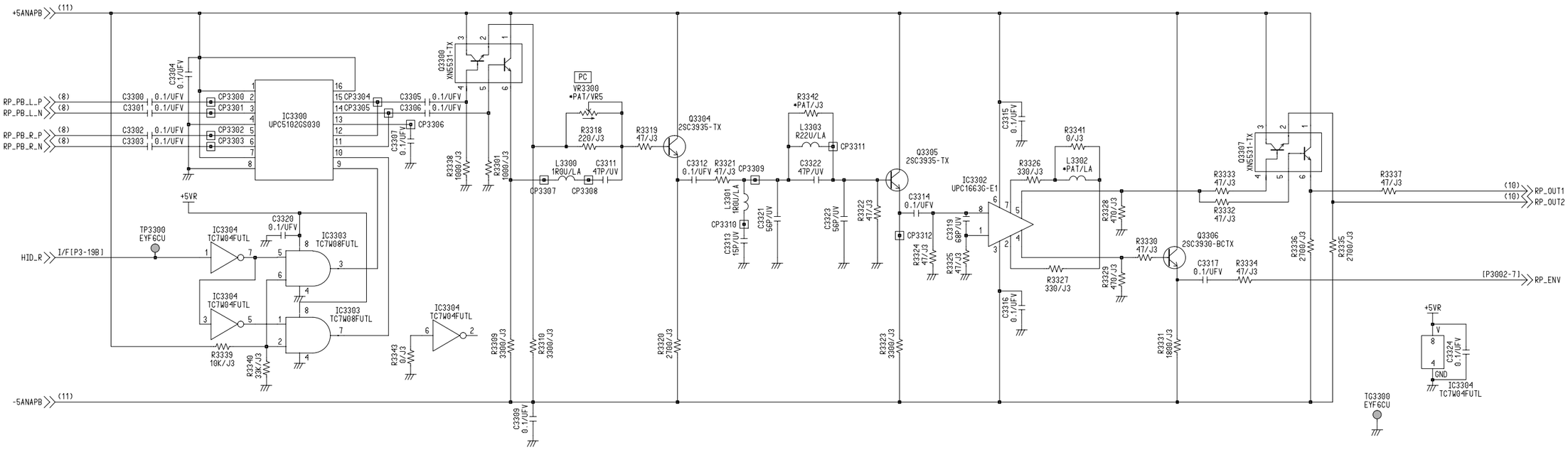

*PAT=PATTERN ONLY

Ref No.3000 Series.

COMPONENT NAME	VTR MAIN (RF)	09/20
CIRCUIT BOARD NO.	MODEL NO.	
T/P:VEP83356D HE:VEP83356E	AJ-D215T/P/HE	
	SCM029	

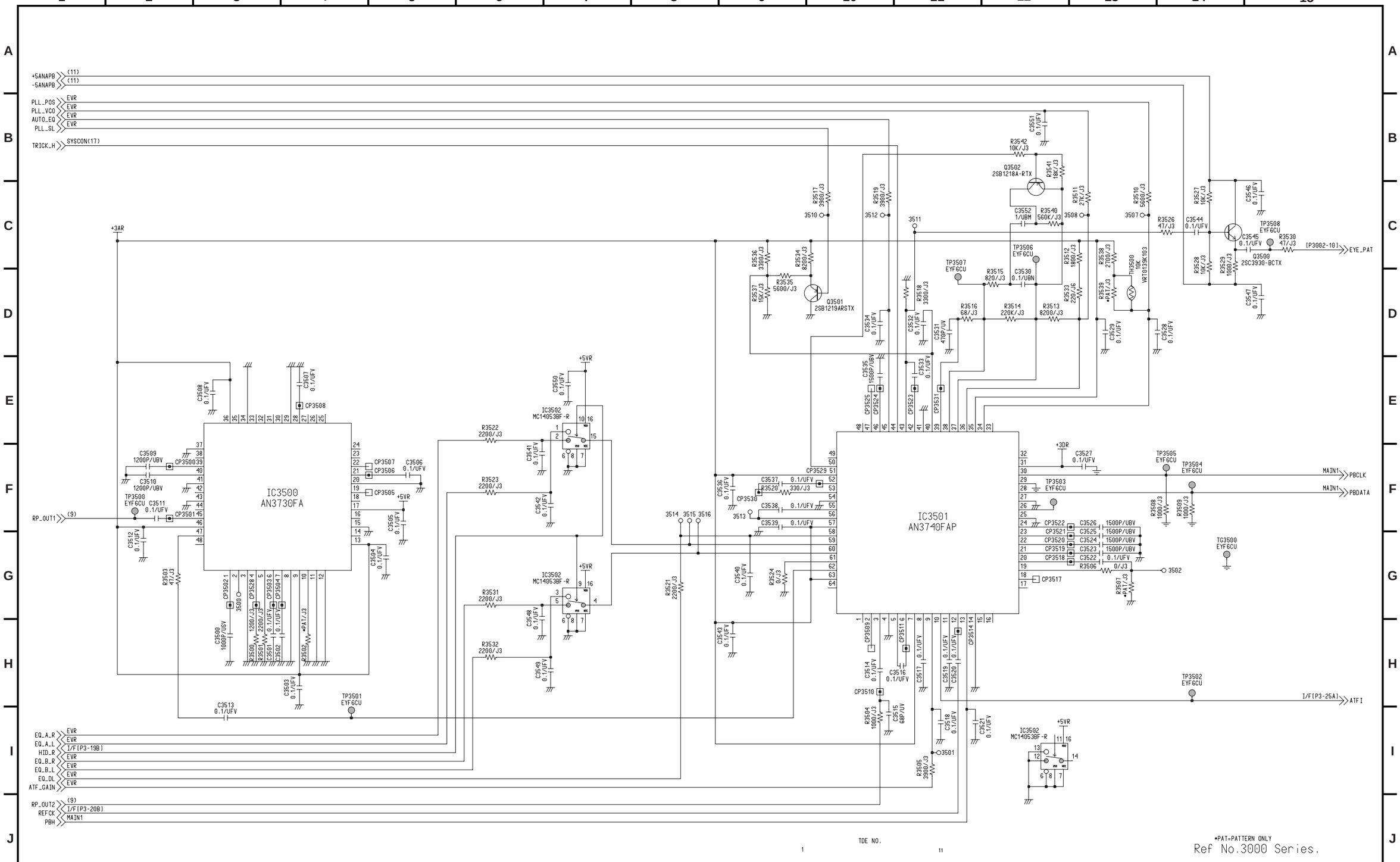

COMPONENT NAME	VTR MAIN (RF)	10/20
CIRCUIT BOARD NO.	MODEL NO.	
T/P:VEP83356D HE:VEP83356E	AJ-D215T/P/HE	
	SCM030	

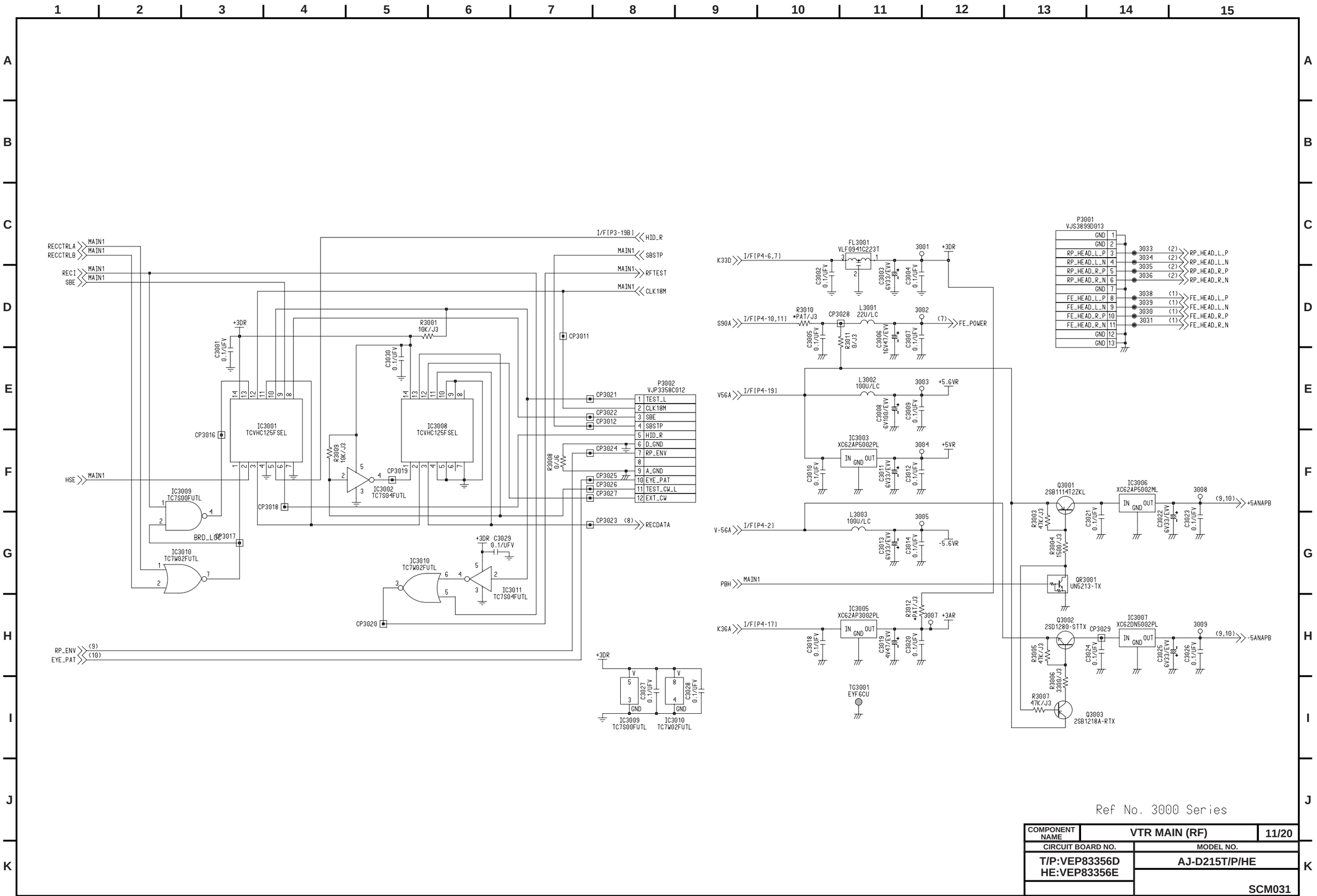

Ref No. 3000 Series

COMPONENT NAME	VTR MAIN (RF)	11/20
CIRCUIT BOARD NO.	MODEL NO.	
T/P:VEP83356D HE:VEP83356E	AJ-D215T/P/HE	
	SCM031	

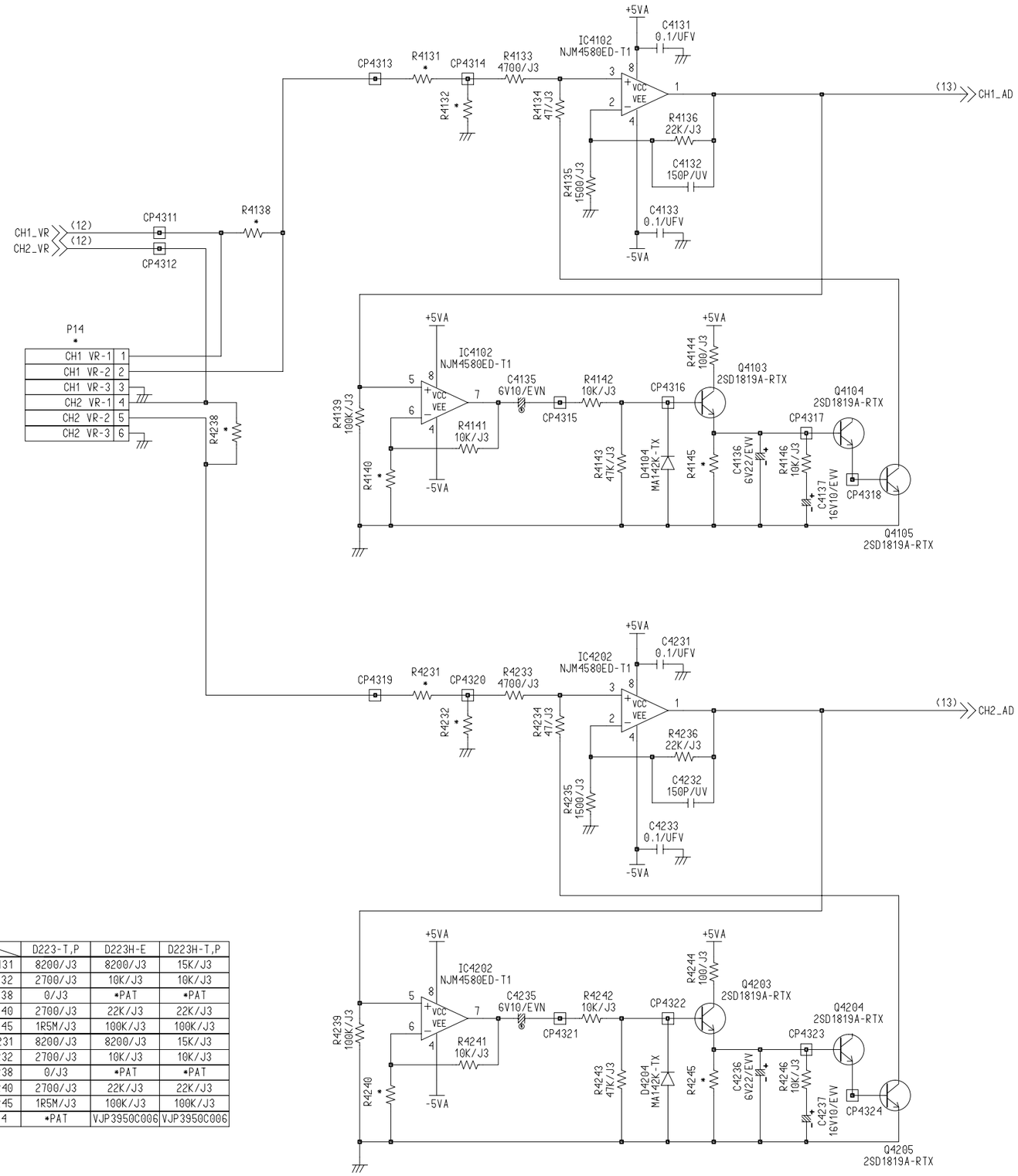

	D223-T,P	D223H-E	D223H-T,P
R4131	8200/J3	8200/J3	15K/J3
R4132	2700/J3	10K/J3	10K/J3
R4138	0/J3	*PAT	*PAT
R4140	2700/J3	22K/J3	22K/J3
R4145	1R5M/J3	100K/J3	100K/J3
R4231	8200/J3	8200/J3	15K/J3
R4232	2700/J3	10K/J3	10K/J3
R4238	0/J3	*PAT	*PAT
R4240	2700/J3	22K/J3	22K/J3
R4245	1R5M/J3	100K/J3	100K/J3
P14	*PAT	VJP3950C006	VJP3950C006

*PAT=PATTERN ONLY

COMPONENT NAME	VTR MAIN (AUDIO AGC)	12/20
CIRCUIT BOARD NO.	MODEL NO.	
T/P:VEP83356D HE:VEP83356E	AJ-D215T/P/HE	
	SCM032	

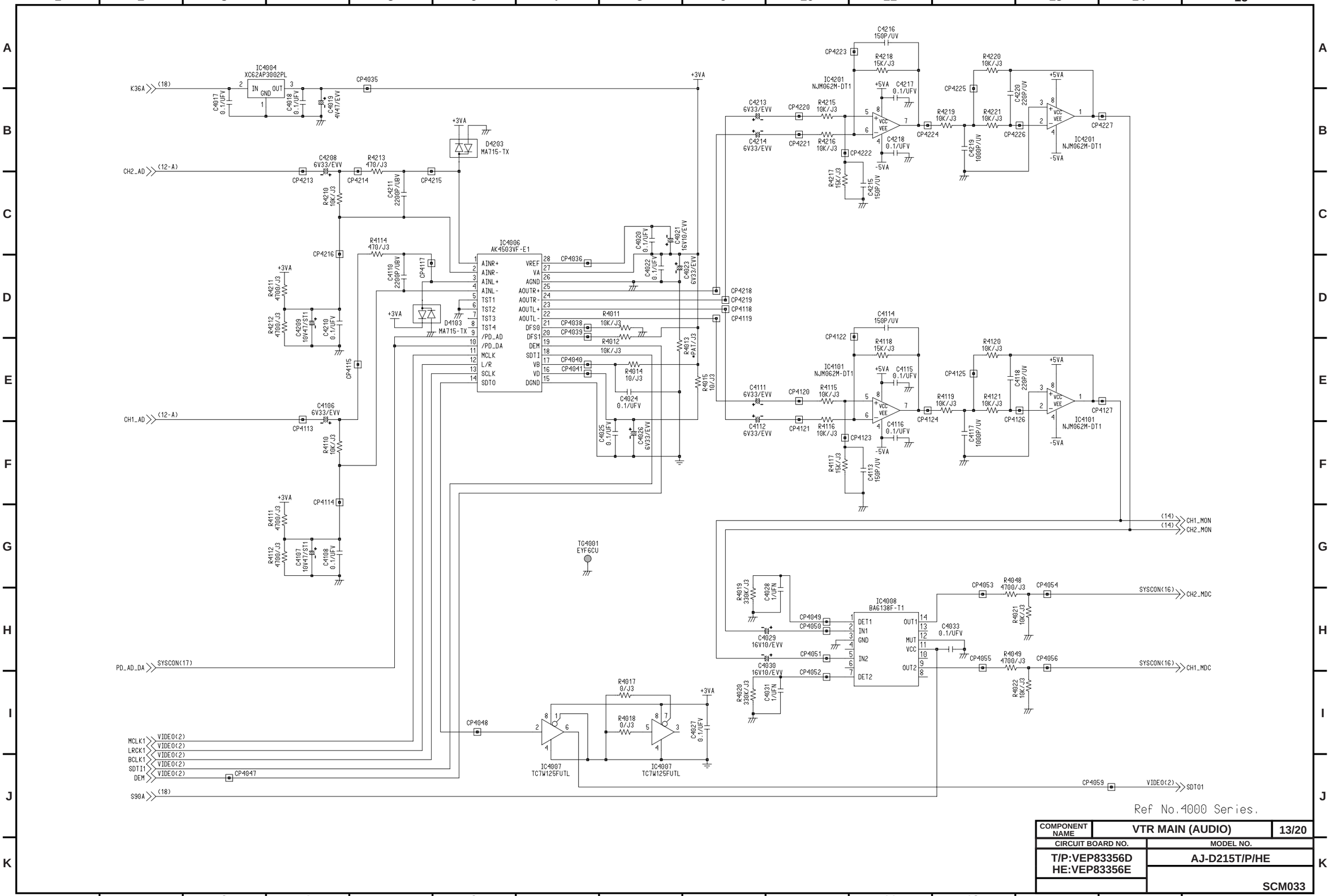

COMPONENT NAME	VTR MAIN (AUDIO)	13/20
CIRCUIT BOARD NO.	MODEL NO.	
T/P:VEP83356D HE:VEP83356E	AJ-D215T/P/HE	
	SCM033	

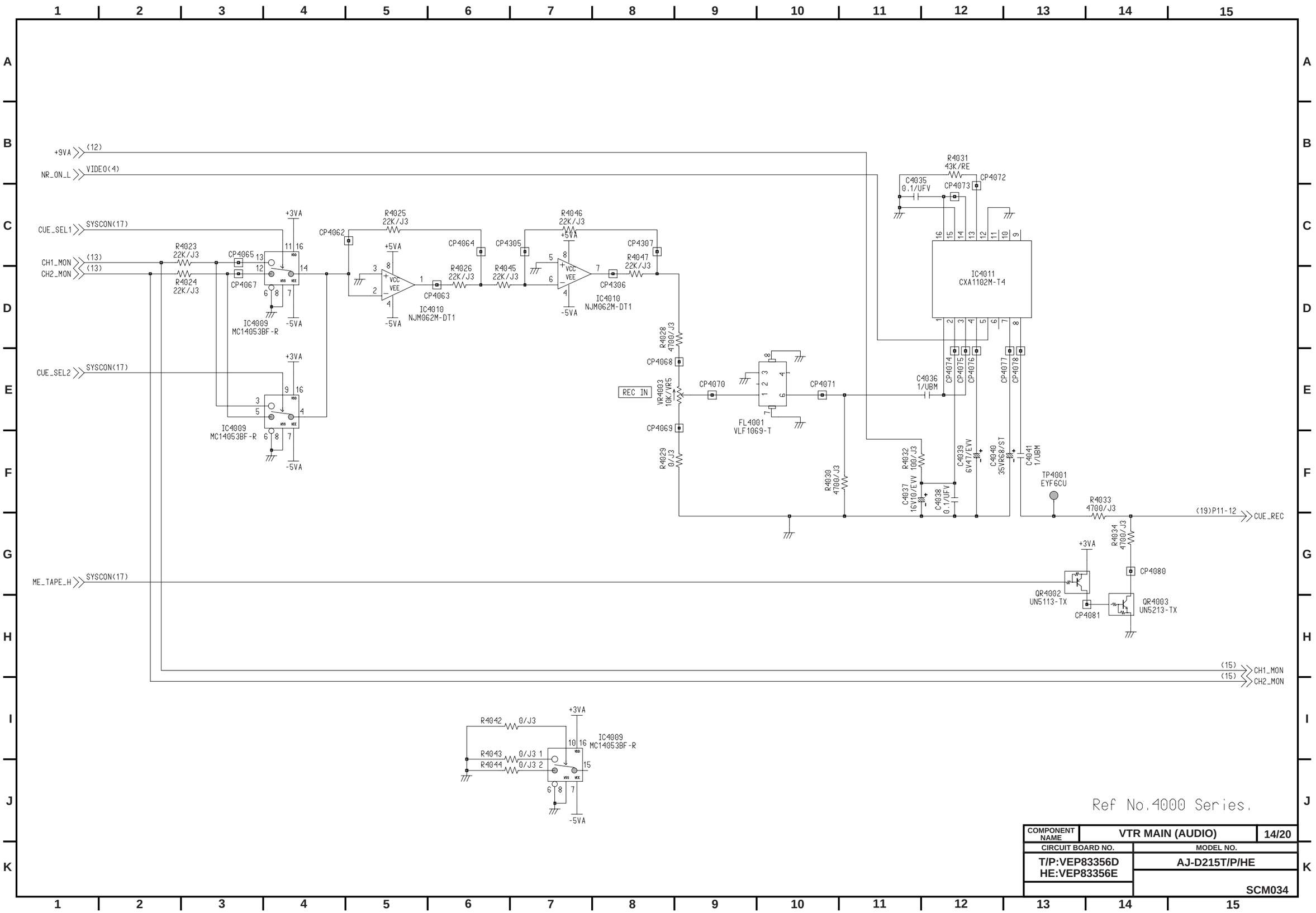

COMPONENT NAME	VTR MAIN (AUDIO)	14/20
CIRCUIT BOARD NO.	MODEL NO.	
T/P:VEP83356D HE:VEP83356E	AJ-D215T/P/HE	
	SCM034	

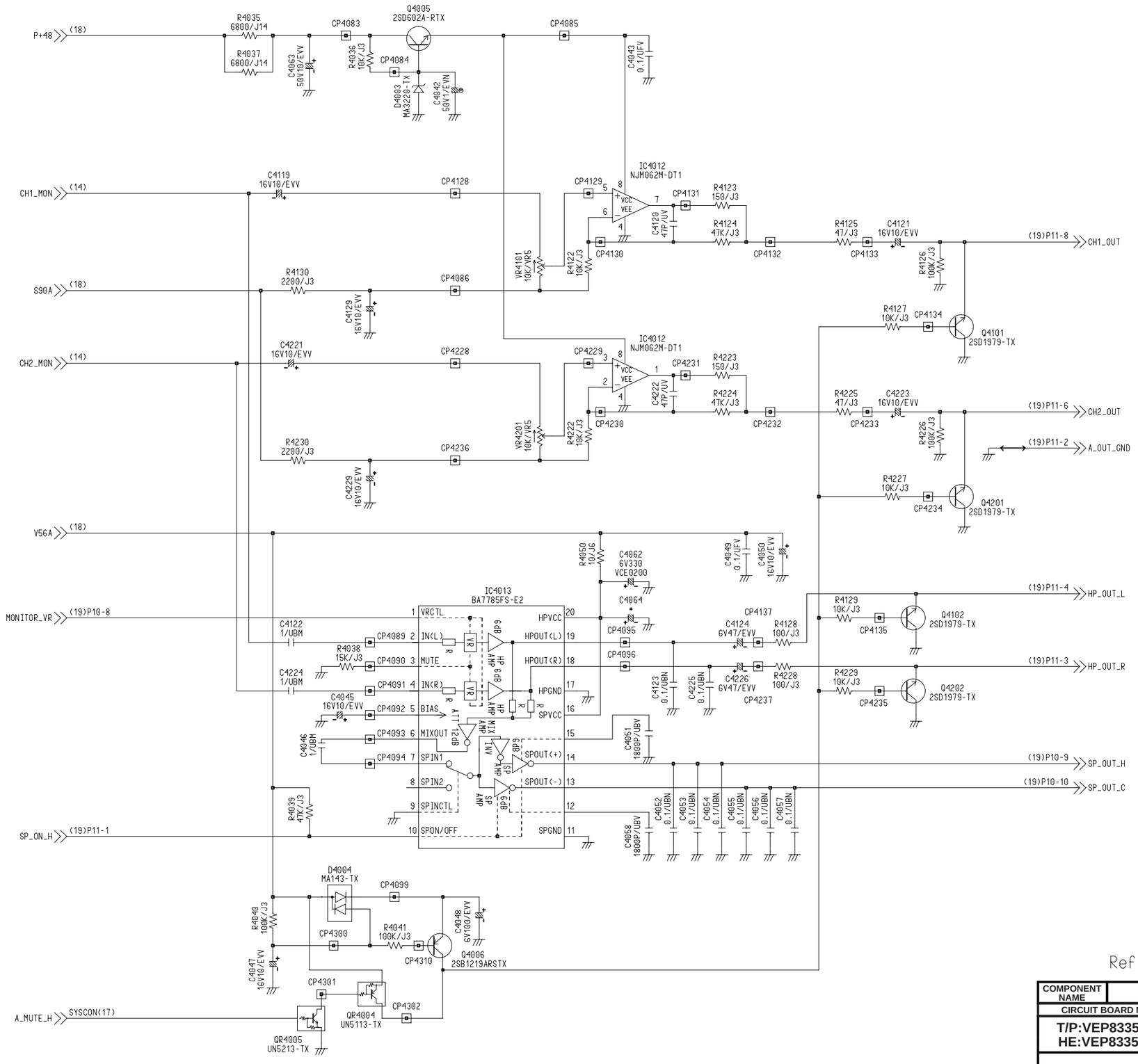

Ref No.4000 Series.

COMPONENT NAME	VTR MAIN (AUDIO)	15/20
CIRCUIT BOARD NO.	MODEL NO.	
T/P:VEP83356D HE:VEP83356E	AJ-D215T/P/HE	
	SCM035	

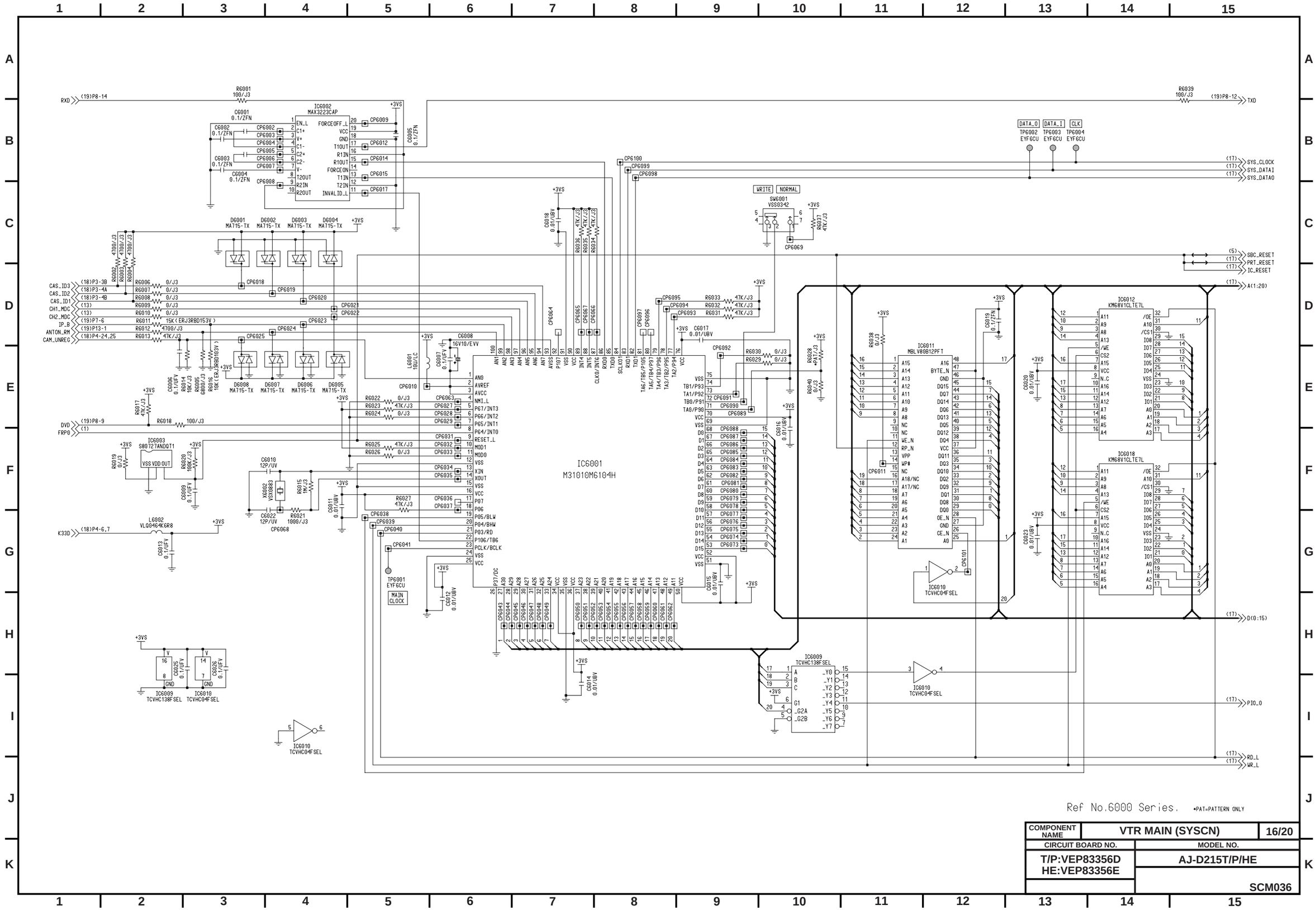

Ref No.6000 Series. *PAT=PATTERN ONLY

COMPONENT NAME	VTR MAIN (SYSCN)	16/20
CIRCUIT BOARD NO.	MODEL NO.	
T/P:VEP83356D HE:VEP83356E	AJ-D215T/P/HE	
	SCM036	

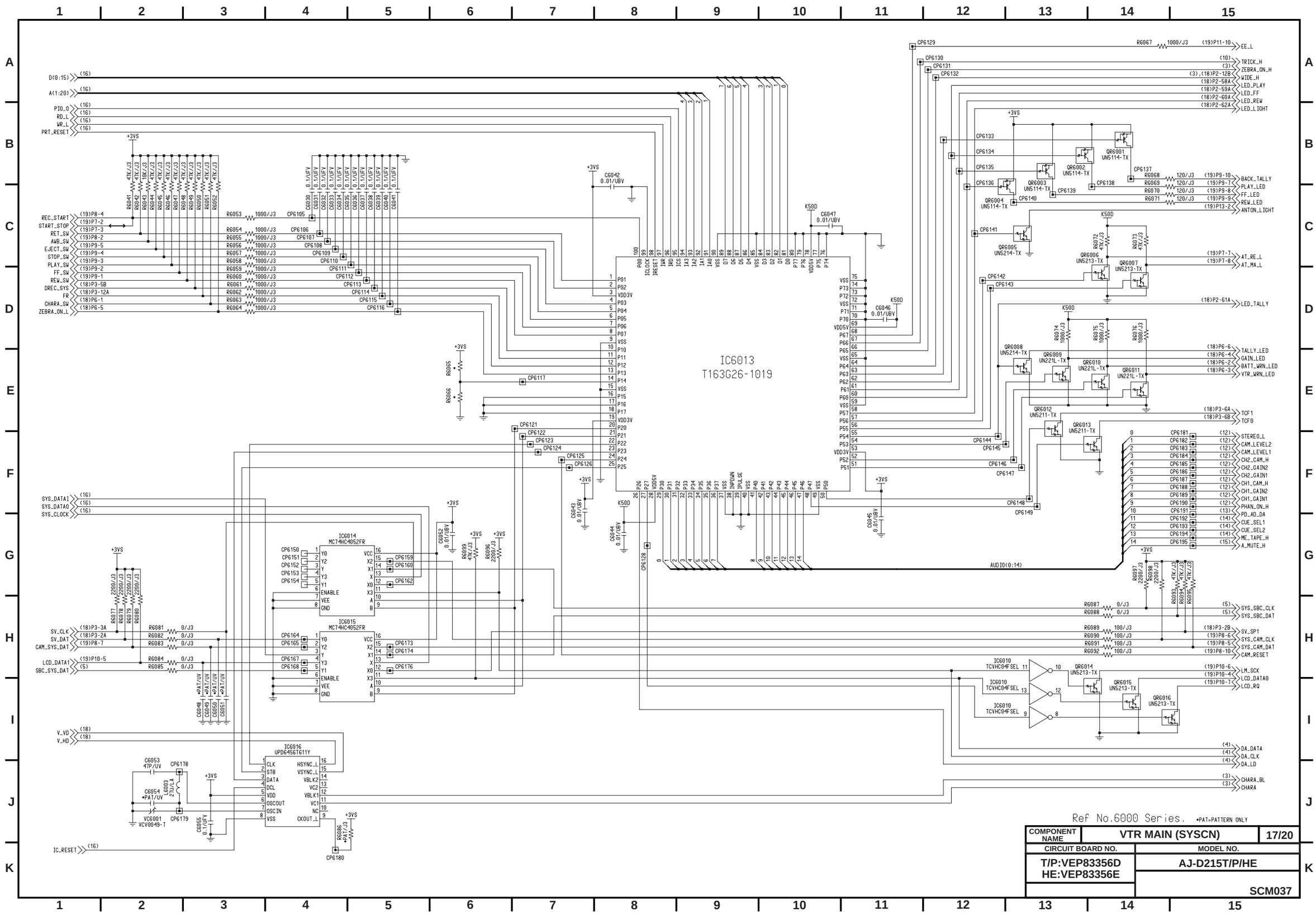
IC6013
T163G26-1019
IC6014
MC74HC4052FR
IC6015
MC74HC4052FR
IC6016
UPD6456T611Y
IC6010
TCVHC04FSEL
AUDIO(0:14)
Ref No.6000 Series.
•PAT=PATTERN ONLY
COMPONENT NAME
VTR MAIN (SYSCN)
17/20
CIRCUIT BOARD NO.
MODEL NO.
T/P:VEP83356D
HE:VEP83356E
AJ-D215T/P/HE
SCM037

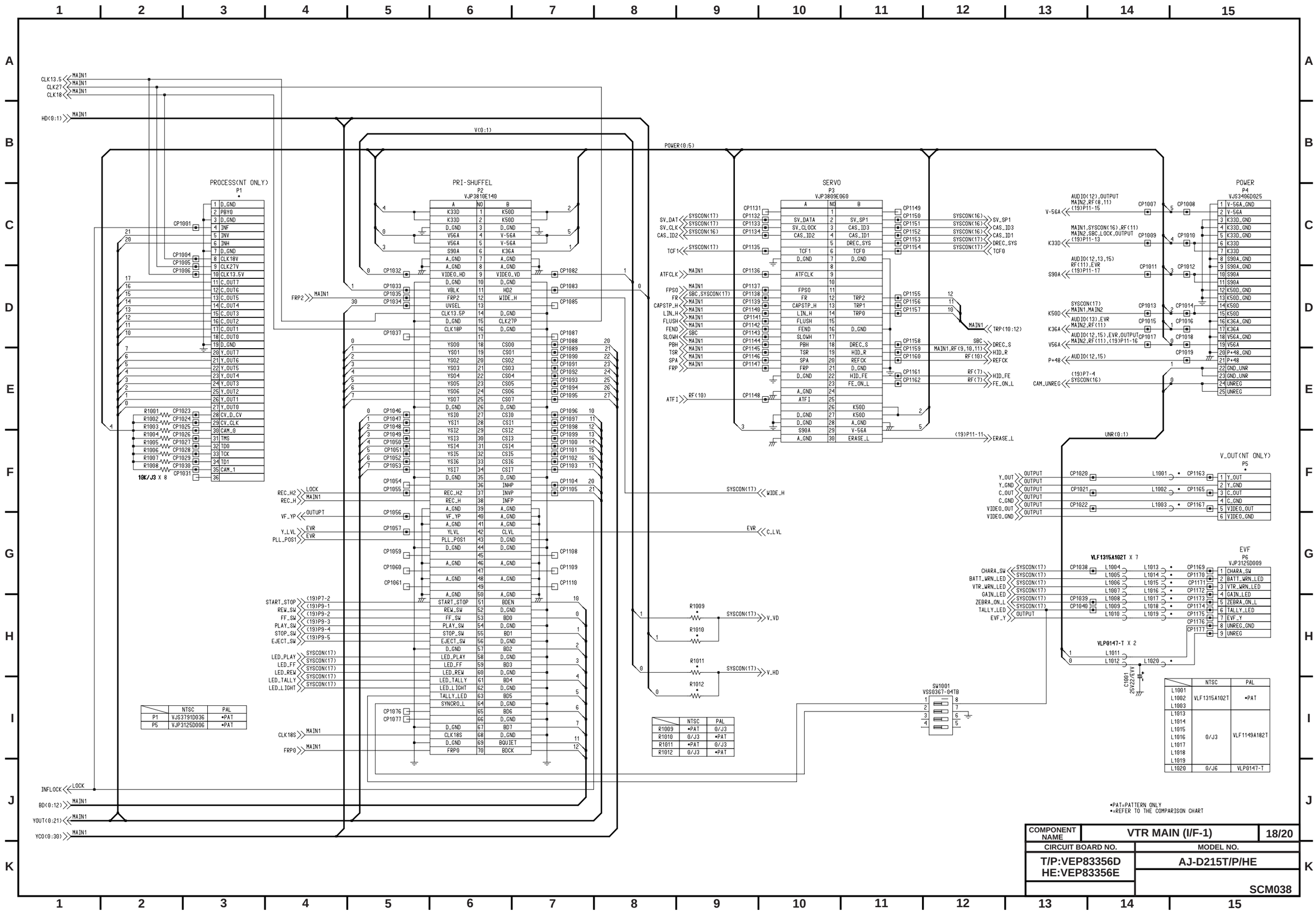

	NTSC	PAL
P1	VJS3791D036	*PAT
P5	VJP3125D006	*PAT

	NTSC	PAL
R1009	*PAT	0/J3
R1010	0/J3	*PAT
R1011	*PAT	0/J3
R1012	0/J3	*PAT

	NTSC	PAL
L1001 L1002 L1003	VLF1315A102T	*PAT
L1013 L1014 L1015 L1016 L1017 L1018 L1019	0/J3	VLF1149A182T
L1020	0/J6	VLP0147-T

COMPONENT NAME	VTR MAIN (I/F-1)	18/20
CIRCUIT BOARD NO.	MODEL NO.	
T/P:VEP83356D HE:VEP83356E	AJ-D215T/P/HE	
	SCM038	

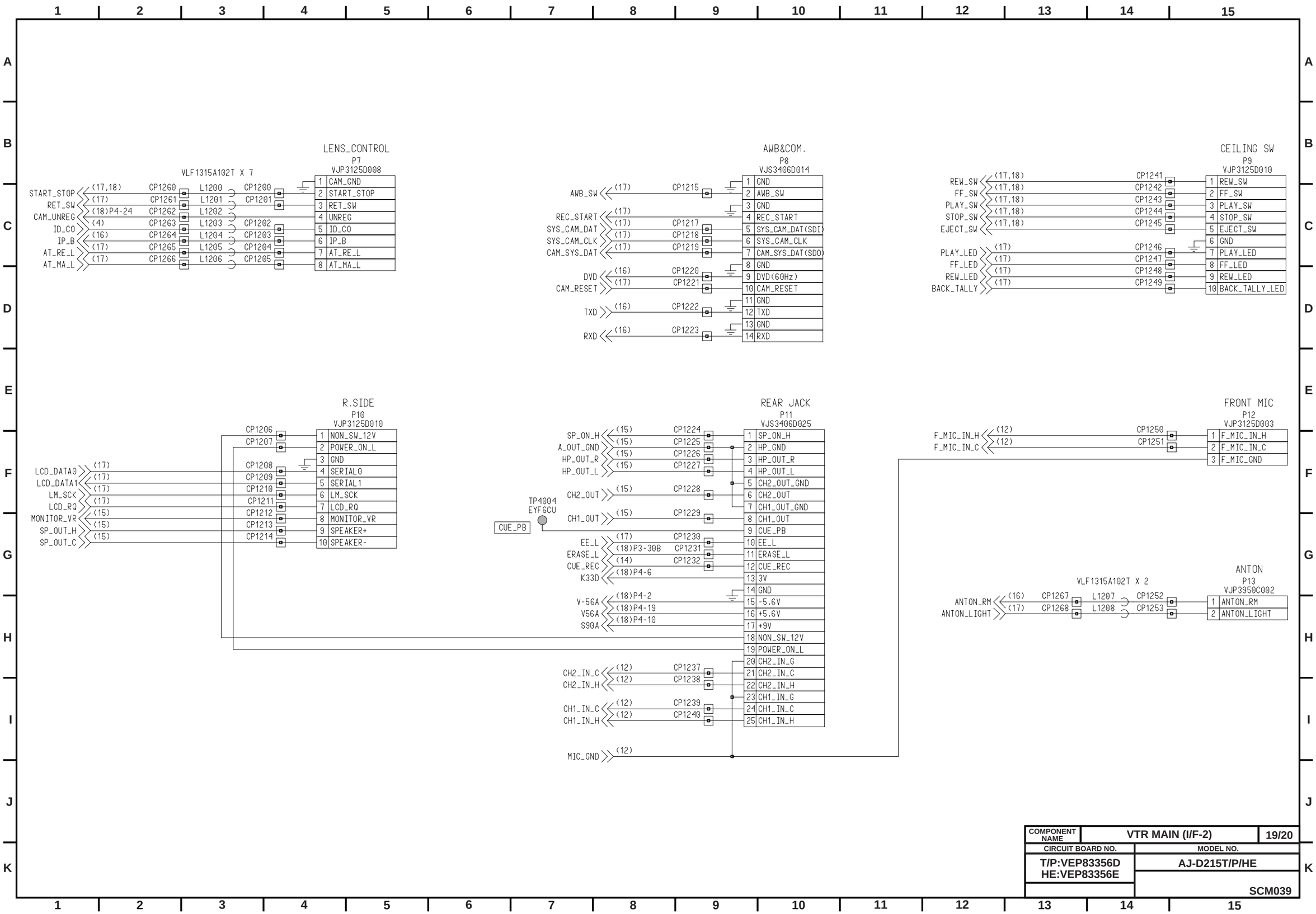

COMPONENT NAME	VTR MAIN (I/F-2)	19/20
CIRCUIT BOARD NO.	MODEL NO.	
T/P:VEP83356D HE:VEP83356E	AJ-D215T/P/HE	
	SCM039	

REF	PAL	NTSC	REF	PAL	NTSC	REF	PAL	NTSC	REF	PAL	NTSC	REF	PAL	NTSC
C124	*PAT/UV	*PAT/UV	C61	*PAT	*PAT	R111	*PAT/J3	*PAT/J3	R262	*PAT/J3	*PAT/J3	R4132	10K/J3	10K/J3
C125	*PAT/UV	*PAT/UV	C63	*PAT/UBV	*PAT/UBV	R112	*PAT/J3	*PAT/J3	R263	*PAT/J3	*PAT/J3	R4138	*PAT/J3	*PAT/J3
C127	*PAT/UV	*PAT/UV	C64	*PAT/UBV	*PAT/UBV	R116	*PAT/J3	*PAT/J3	R264	*PAT/J3	*PAT/J3	R4140	22K/J3	22K/J3
C128	*PAT/UV	*PAT/UV	C65	*PAT/UBV	*PAT/UBV	R117	*PAT/J3	*PAT/J3	R265	*PAT/RE7	*PAT/RE7	R4145	100K/J3	100K/J3
C129	*PAT/UFV	*PAT/UFV	C80	*PAT/UBV	*PAT/UBV	R118	*PAT/J3	*PAT/J3	R266	*PAT/J3	*PAT/J3	R4231	8200/J3	15K/J3
C130	*PAT/UFV	*PAT/UFV	C81	*PAT/UBV	*PAT/UBV	R135	*PAT/J3	*PAT/J3	R267	*PAT/J3	*PAT/J3	R4232	10K/J3	10K/J3
C131	*PAT/UBV	*PAT/UBV	C82	*PAT/UBV	*PAT/UBV	R136	*PAT/J3	*PAT/J3	R268	*PAT/J3	*PAT/J3	R4238	*PAT/J3	*PAT/J3
C136	*PAT/UV	*PAT/UV	C88	*PAT/UBV	*PAT/UBV	R137	*PAT/J3	*PAT/J3	R269	*PAT/J3	*PAT/J3	R4240	22K/J3	22K/J3
C137	*PAT/UV	*PAT/UV	FL2	*PAT	*PAT	R138	*PAT/J3	*PAT/J3	R27	*PAT/J3	*PAT/J3	R4245	100K/J3	100K/J3
C142	*PAT/UFV	*PAT/UFV	FL4	*PAT	*PAT	R139	*PAT/J3	*PAT/J3	R270	*PAT/J3	*PAT/J3	R505	*PAT/J3	*PAT/J3
C143	*PAT/UV	*PAT/UV	IC15	*PAT	*PAT	R141	*PAT/J3	*PAT/J3	R271	*PAT/J3	*PAT/J3	R527	*PAT/J3	*PAT/J3
C144	*PAT/UV	*PAT/UV	IC2	MN4707F	MN4707F	R142	*PAT/J3	*PAT/J3	R272	*PAT/J3	*PAT/J3	R529	*PAT/J3	*PAT/J3
C145	*PAT/UV	*PAT/UV	IC26	*PAT	*PAT	R143	*PAT/J3	*PAT/J3	R273	*PAT/J3	*PAT/J3	R531	*PAT/J3	*PAT/J3
C149	*PAT/UBN	*PAT/UBN	IC31	*PAT	*PAT	R145	*PAT/J3	*PAT/J3	R274	*PAT/J3	*PAT/J3	R532	0/J3	0/J3
C150	*PAT/UFV	*PAT/UFV	IC32	*PAT	*PAT	R146	*PAT/J3	*PAT/J3	R275	*PAT/J3	*PAT/J3	R545	*PAT/J3	*PAT/J3
C151	*PAT/UFV	*PAT/UFV	IC3207	*PAT	*PAT	R147	*PAT/J3	*PAT/J3	R276	*PAT/RE7	*PAT/RE7	R548	*PAT/J3	*PAT/J3
C152	*PAT/EVV	*PAT/EVV	IC35	*PAT	*PAT	R148	*PAT/J3	*PAT/J3	R277	*PAT/J3	*PAT/J3	R6028	*PAT/J3	*PAT/J3
C153	*PAT/UV	*PAT/UV	IC48	*PAT	*PAT	R149	*PAT/J3	*PAT/J3	R278	*PAT/J3	*PAT/J3	R6065	*PAT/J3	*PAT/J3
C154	*PAT/UFV	*PAT/UFV	L10	*PAT/LA	*PAT/LA	R150	*PAT/J3	*PAT/J3	R279	*PAT/J3	*PAT/J3	R6066	0/J3	0/J3
C155	*PAT/EVN	*PAT/EVN	L12	*PAT/LC	*PAT/LC	R151	*PAT/J3	*PAT/J3	R280	*PAT/J3	*PAT/J3	R6086	*PAT/J3	*PAT/J3
C156	*PAT/UBN	*PAT/UBN	L13	*PAT/LC	*PAT/LC	R153	*PAT/RE7	*PAT/RE7	R289	*PAT/RE7	*PAT/RE7	R74	*PAT/J3	*PAT/J3
C159	*PAT/UV	*PAT/UV	L17	*PAT/LC	*PAT/LC	R154	*PAT/J3	*PAT/J3	R290	*PAT/J3	*PAT/J3	R75	*PAT/J3	*PAT/J3
C160	15P/UV	15P/UV	L31	*PAT	*PAT	R155	*PAT/J3	*PAT/J3	R295	*PAT/J3	*PAT/J3	R76	*PAT	*PAT
C167	*PAT/EVV	*PAT/EVV	L40	*PAT/LA	*PAT/LA	R156	*PAT/J3	*PAT/J3	R296	*PAT/J3	*PAT/J3	R77	*PAT	*PAT
C181	*PAT/UV	*PAT/UV	L41	*PAT/LA	*PAT/LA	R157	*PAT/J3	*PAT/J3	R300	*PAT/J3	*PAT/J3	R78	*PAT/J3	*PAT/J3
C182	*PAT/UV	*PAT/UV	L1001	*PAT	*PAT	R158	*PAT/J3	*PAT/J3	R3010	*PAT/J3	*PAT/J3	R81	*PAT/J3	*PAT/J3
C183	*PAT/UFV	*PAT/UFV	L1002	*PAT	*PAT	R161	*PAT/J3	*PAT/J3	R3012	*PAT/J3	*PAT/J3	R84	*PAT/J3	*PAT/J3
C184	*PAT/UFV	*PAT/UFV	L1003	*PAT	*PAT	R162	*PAT/J3	*PAT/J3	R3210	*PAT/RE7	*PAT/RE7	R85	*PAT/J3	*PAT/J3
C186	*PAT/UFV	*PAT/UFV	L1013	VLF1149A182T	VLF1149A182T	R163	*PAT/J3	*PAT/J3	R3211	*PAT/RE7	*PAT/RE7	R86	*PAT/J3	*PAT/J3
C187	*PAT/EVV	*PAT/EVV	L1014	VLF1149A182T	VLF1149A182T	R164	*PAT/J3	*PAT/J3	R3227	*PAT/J3	*PAT/J3	R87	*PAT/J3	*PAT/J3
C189	*PAT/UFV	*PAT/UFV	L1015	VLF1149A182T	VLF1149A182T	R165	*PAT/J3	*PAT/J3	R3264	*PAT/J3	*PAT/J3	R88	*PAT/J3	*PAT/J3
C190	*PAT/EVV	*PAT/EVV	L1016	VLF1149A182T	VLF1149A182T	R166	*PAT/RE7	*PAT/RE7	R3293	*PAT/J3	*PAT/J3	R89	*PAT/J3	*PAT/J3
C196	*PAT/UFV	*PAT/UFV	L1017	VLF1149A182T	VLF1149A182T	R167	*PAT/RE7	*PAT/RE7	R3294	*PAT/J3	*PAT/J3	R90	*PAT/J3	*PAT/J3
C197	*PAT/UBV	*PAT/UBV	L1018	VLF1149A182T	VLF1149A182T	R168	*PAT/J3	*PAT/J3	R3295	*PAT/J3	*PAT/J3	R91	*PAT/J3	*PAT/J3
C3101	*PAT/UV	*PAT/UV	L1019	VLF1149A182T	VLF1149A182T	R169	*PAT/J3	*PAT/J3	R3296	*PAT/J3	*PAT/J3	R92	*PAT/J3	*PAT/J3
C3103	*PAT/UV	*PAT/UV	L1020	VLP0147-T	VLP0147-T	R170	*PAT/J3	*PAT/J3	R3342	*PAT/J3	*PAT/J3	R93	*PAT/J3	*PAT/J3
C3108	*PAT/UV	*PAT/UV	L3302	*PAT/LA	*PAT/LA	R171	*PAT/J3	*PAT/J3	R3400	*PAT/J3	*PAT/J3	R94	*PAT/J3	*PAT/J3
C3110	*PAT/UV	*PAT/UV	P1	*PAT	*PAT	R179	*PAT/J3	*PAT/J3	R3401	*PAT/J3	*PAT/J3	R95	*PAT/J3	*PAT/J3
C3209	*PAT/UV	*PAT/UV	P5	*PAT	*PAT	R180	*PAT/J3	*PAT/J3	R3402	*PAT/J3	*PAT/J3	R96	*PAT/J3	*PAT/J3
C3216	*PAT/UV	*PAT/UV	P14	VJP3950C006	VJP3950C006	R181	*PAT/J3	*PAT/J3	R3403	*PAT/J3	*PAT/J3	R97	*PAT/J3	*PAT/J3
C3226	*PAT/UV	*PAT/UV	Q1	*PAT	*PAT	R182	*PAT/J6	*PAT/J6	R3404	*PAT/J3	*PAT/J3	R98	*PAT/RE7	*PAT/RE7
C3230	*PAT/UV	*PAT/UV	Q11	*PAT	*PAT	R189	*PAT/J3	*PAT/J3	R3405	*PAT/J3	*PAT/J3	R99	*PAT/J3	*PAT/J3
C3237	*PAT/UV	*PAT/UV	Q12	*PAT	*PAT	R190	0/J3	0/J3	R3406	*PAT/J3	*PAT/J3	TP13	*PAT	*PAT
C3248	*PAT/UFV	*PAT/UFV	Q13	*PAT	*PAT	R199	*PAT/J3	*PAT/J3	R3407	*PAT/J3	*PAT/J3	TP14	*PAT	*PAT
C3249	*PAT/UFV	*PAT/UFV	Q14	*PAT	*PAT	R220	*PAT/J3	*PAT/J3	R3408	*PAT/J3	*PAT/J3	TP15	*PAT	*PAT
C3250	*PAT/UFV	*PAT/UFV	Q15	*PAT	*PAT	R221	*PAT/J3	*PAT/J3	R3409	*PAT/J3	*PAT/J3	TP3	*PAT	*PAT
C3251	*PAT/USV	*PAT/USV	Q18	*PAT	*PAT	R229	*PAT/J3	*PAT/J3	R3410	*PAT/J3	*PAT/J3	TP4	*PAT	*PAT
C3252	*PAT/USV	*PAT/USV	Q19	*PAT	*PAT	R230	47/J3	47/J3	R3411	*PAT/J3	*PAT/J3	VC1	*PAT	*PAT
C3253	*PAT/UFV	*PAT/UFV	Q2	*PAT	*PAT	R231	*PAT/J3	*PAT/J3	R3412	*PAT/J3	*PAT/J3	VR10	*PAT/VR5	*PAT/VR5
C3254	*PAT/USV	*PAT/USV	Q24	*PAT	*PAT	R233	1000/RE7	1000/RE7	R3413	*PAT/J3	*PAT/J3	VR12	*PAT/VR5	*PAT/VR5
C3255	*PAT/USV	*PAT/USV	Q3	*PAT	*PAT	R237	*PAT/J3	*PAT/J3	R3414	*PAT/J3	*PAT/J3	VR3300	*PAT/VR5	*PAT/VR5
C4064	6V330	6V330	Q3231	*PAT	*PAT	R239	0/J3	0/J3	R3415	*PAT/J3	*PAT/J3	VR5	*PAT/VR5	*PAT/VR5
C55	*PAT	*PAT	Q3232	*PAT	*PAT	R247	*PAT/RE7	*PAT/RE7	R3419	*PAT/J3	*PAT/J3	VR6	*PAT/VR5	*PAT/VR5
C56	*PAT	*PAT	Q3233	*PAT	*PAT	R248	*PAT/RE7	*PAT/RE7	R3421	*PAT/J3	*PAT/J3	VR7	*PAT/VR5	*PAT/VR5
C57	*PAT/UBV	*PAT/UBV	Q3234	*PAT	*PAT	R252	*PAT/J3	*PAT/J3	R3422	*PAT/J3	*PAT/J3	VR8	*PAT/VR5	*PAT/VR5
C58	*PAT/EVV	*PAT/EVV	Q4	*PAT	*PAT	R254	*PAT/J3	*PAT/J3	R3430	*PAT/J3	*PAT/J3	X2	VSX0937	VSX0937
C59	*PAT/UBV	*PAT/UBV	Q5	*PAT	*PAT	R255	*PAT/J3	*PAT/J3	R3437	*PAT/J3	*PAT/J3			
C60	*PAT	*PAT	Q7	*PAT	*PAT	R256	*PAT/J3	*PAT/J3	R3440	*PAT/J3	*PAT/J3			
C6048	*PAT/UV	*PAT/UV	R1	*PAT/J3	*PAT/J3	R257	*PAT/J3	*PAT/J3	R3502	*PAT/J3	*PAT/J3			
C6049	*PAT/UV	*PAT/UV	R1009	0/J3	0/J3	R258	*PAT/J3	*PAT/J3	R3507	*PAT/J3	*PAT/J3			
C6050	*PAT/UV	*PAT/UV	R1010	*PAT/J3	*PAT/J3	R259	*PAT/J3	*PAT/J3	R3539	*PAT/J3	*PAT/J3			
C6051	*PAT/UV	*PAT/UV	R1011	0/J3	0/J3	R260	*PAT/J3	*PAT/J3	R4013	*PAT/J3	*PAT/J3			
C6054	*PAT/UV	*PAT/UV	R1012	*PAT/J3	*PAT/J3	R261	*PAT/J3	*PAT/J3	R4131	8200/J3	15K/J3			

COMPONENT NAME	VTR MAIN (COMPARISON CHART)	20/20
CIRCUIT BOARD NO.	MODEL NO.	
T/P:VEP83356D HE:VEP83356E	AJ-D215T/P/HE	
	SCM040	